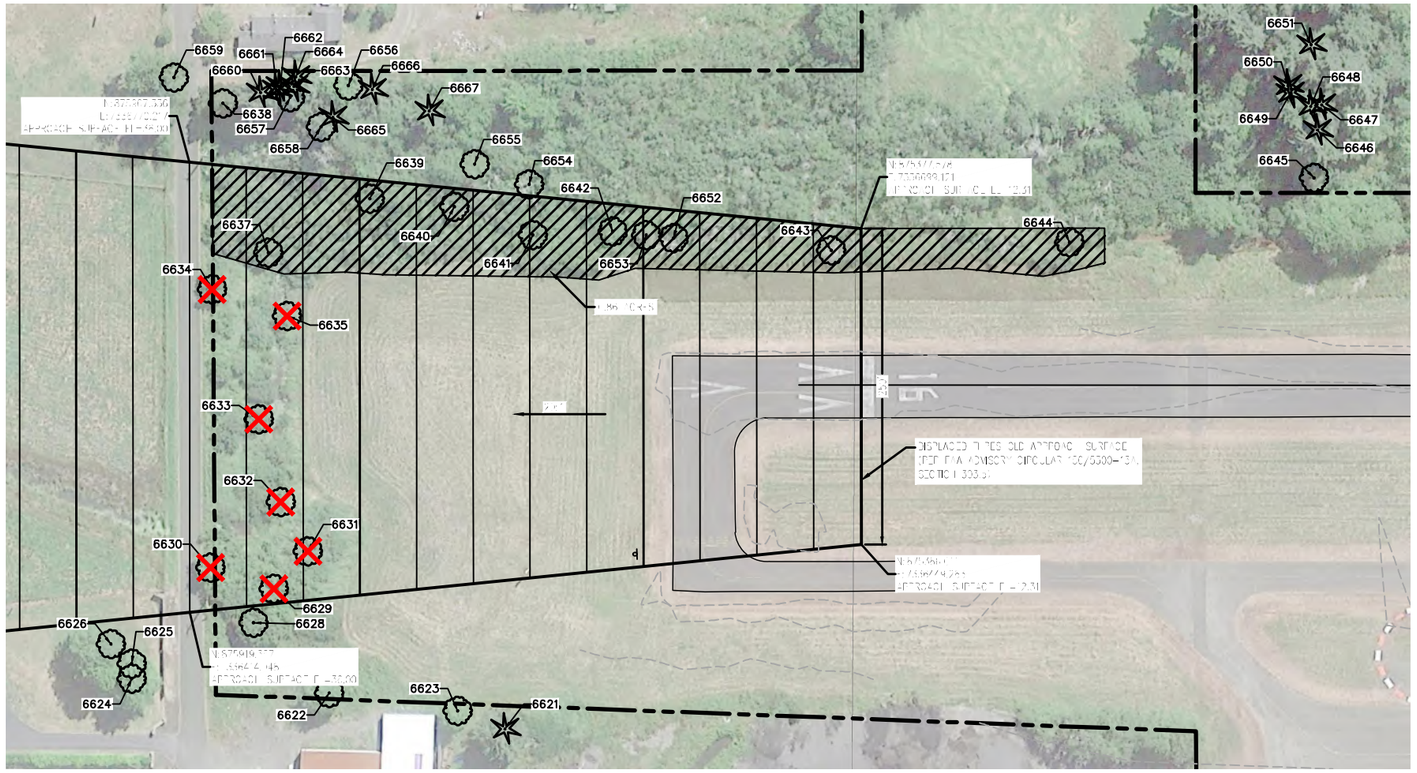

TREE REMOVAL PLAN
SCALE: 1"=60'
1
C-8

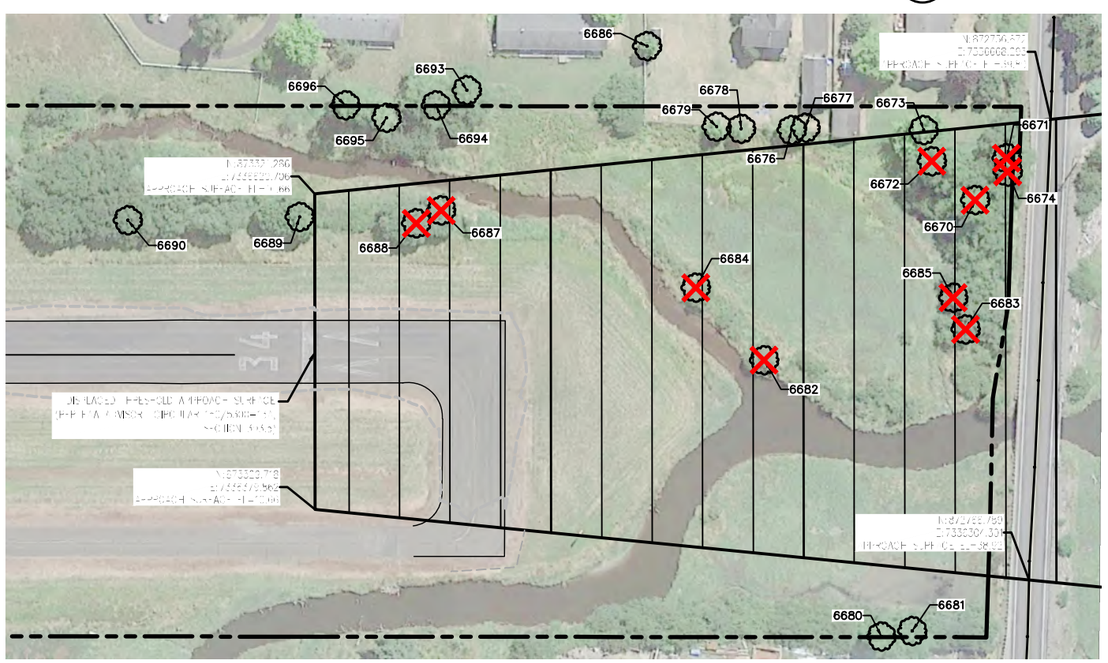

TREE REMOVAL PLAN
SCALE: 1"=60'
2
C-8

Existing					13A Approach Surface		Action
Point #	Northing	Easting	Elevation	Description	Surface Elevation	Penetration Value	
6621	875673.27	7336312.93	75.58	FIR	0	N/A	
6622	875811.37	7336346.37	49.46	DECID	0	N/A	
6623	875710.21	7336328.69	45.70	DECID	0	N/A	
6624	875967.23	7336363.14	66.56	DECID	0	N/A	
6625	875966.81	7336375.00	67.25	DECID	0	N/A	
6626	875982.74	7336391.12	66.58	DECID	0	N/A	
6628	875869.35	7336404.04	39.36	DECID	0	N/A	
6629	875852.35	7336430.30	32.33	DECID	33.0417	-0.72	Remove
6630	875901.85	7336448.88	42.64	DECID	35.2728	7.37	Remove
6631	875824.38	7336459.05	28.70	DECID	31.8396	-3.14	Remove
6632	875844.43	7336498.78	26.56	DECID	32.7919	-6.23	Remove
6633	875859.56	7336564.88	26.66	DECID	33.5644	-6.90	Remove
6634	875892.95	7336668.96	31.98	DECID	35.2075	-3.23	Remove
6635	875834.28	7336645.79	26.70	DECID	32.561	-5.86	Remove
6637	875847.41	7336696.42	34.21	DECID	33.2216	0.99	Remove
6638	875879.16	7336815.84	41.11	DECID	0	N/A	
6639	875765.59	7336736.40	35.43	DECID	29.6389	5.79	Remove
6640	875698.90	7336727.55	34.71	DECID	26.6571	8.05	Remove
6641	875637.56	7336703.06	36.86	DECID	23.8894	12.97	Remove
6642	875574.29	7336703.70	34.15	DECID	21.0737	13.08	Remove
6643	875401.90	7336682.77	30.72	DECID	13.3681	17.35	Remove
6644	875213.14	7336682.55	27.97	DECID	0	N/A	
6645	875017.79	7336726.79	35.41	DECID	0	N/A	
6646	875013.64	7336764.35	118.74	FIR	0	N/A	
6647	875009.67	7336784.23	116.60	FIR	0	N/A	
6648	875018.28	7336783.36	107.63	FIR	0	N/A	
6649	875034.28	7336794.31	117.98	FIR	0	N/A	
6650	875035.83	7336800.39	104.32	FIR	0	N/A	
6651	875016.43	7336832.07	116.12	FIR	0	N/A	
6652	875526.17	7336696.80	46.10	DECID	18.9214	27.18	Remove
6653	875547.79	7336699.88	44.65	DECID	19.8886	24.76	Remove
6654	875639.05	7336743.30	56.87	DECID	0	N/A	
6655	875681.63	7336760.77	58.42	DECID	0	N/A	
6656	875779.36	7336826.44	65.94	DECID	0	N/A	
6657	875825.82	7336818.77	67.61	DECID	0	N/A	
6658	875802.27	7336794.44	66.21	DECID	0	N/A	
6659	875917.27	7336837.63	81.35	DECID	0	N/A	
6660	875849.07	7336823.26	90.41	FIR	0	N/A	
6661	875836.52	7336825.10	92.48	FIR	0	N/A	
6662	875833.37	7336827.70	91.60	FIR	0	N/A	
6663	875822.43	7336827.19	88.27	FIR	0	N/A	
6664	875820.75	7336834.67	84.96	FIR	0	N/A	
6665	875792.52	7336801.73	86.09	FIR	0	N/A	
6666	875760.52	7336822.57	65.38	FIR	0	N/A	
6667	875716.14	7336804.03	66.52	FIR	0	N/A	
6670	872798.94	7336606.54	64.02	DECID	36.8014	27.22	Remove
6671	872772.80	7336638.87	62.64	DECID	38.0533	24.59	Remove
6672	872832.11	7336638.40	60.72	DECID	35.09	25.63	Remove
6673	872837.75	7336663.31	55.67	DECID	0	N/A	
6674	872772.36	7336628.14	46.23	DECID	38.0934	8.13	Remove
6676	872942.19	7336667.04	37.78	DECID	0	N/A	
6677	872931.18	7336668.46	35.68	DECID	0	N/A	
6678	872982.17	7336669.39	34.77	DECID	0	N/A	
6679	873001.51	7336671.71	36.39	DECID	0	N/A	
6680	872885.24	7336263.80	61.04	DECID	0	N/A	
6681	872860.63	7336267.27	55.90	DECID	0	N/A	
6682	872970.32	7336485.64	19.69	DECID	28.4412	-8.75	Remove
6683	872810.07	7336504.42	28.11	DECID	36.4174	-8.30	Remove
6684	873022.44	7336544.97	24.50	DECID	25.7366	-1.24	Remove
6685	872818.97	7336529.85	27.64	DECID	35.93	-8.29	Remove
6686	873054.26	7336737.40	34.24	DECID	0	N/A	
6687	873221.74	7336613.13	32.55	DECID	15.6624	16.88	Remove
6688	873241.88	7336603.60	34.82	DECID	14.672	20.15	Remove
6689	873333.86	7336611.84	40.15	DECID	0	N/A	
6690	873469.89	7336613.92	35.64	DECID	0	N/A	
6691	873715.74	7336624.69	32.40	DECID	0	N/A	
6693	873198.12	7336707.48	45.19	DECID	0	N/A	
6694	873222.98	7336696.37	59.26	DECID	0	N/A	
6695	873262.50	7336687.85	66.17	DECID	0	N/A	
6696	873294.51	7336698.95	66.32	DECID	0	N/A	
6793	874748.01	7336331.47	11.65	24" FIR	0	N/A	

LEGEND:

- TREE TO BE REMOVED (PAID BY EACH)
- AREA OF SCATTERED SMALL TREES. REMOVE TO 12" OFF THE GROUND (PAID BY AREA)
- PROPERTY LINE

NOTES:

1. FOR TREE INDICATED TO BE REMOVED, CONTRACTOR SHALL REMOVE TREES TO WITHIN 12" OF THE GROUND. NO STUMP REMOVAL ALLOWED.
2. TREE REMOVAL SHALL BE DONE ON FOOT OR WITH LIGHT EQUIPMENT THAT WILL NOT LEAVE ANY RUTS MORE THAN ONE INCH. REMOVAL IS IN DESIGNATED WETLAND.
3. ALL TREES AND OTHER DEBRIS SHALL BE DISPOSED OF OFFSITE.

N

SCALE
60 0 30 60 120
(1" SEE 1)
1 INCH = 60 FT.

PRELIMINARY

WHPacific
9755 SW Barnes Rd, Suite 300
Portland, OR 97225
503-626-0455 Fax 503-526-0775
www.whpacific.com

REGISTERED PROFESSIONAL ENGINEER
PRELIMINARY
JAN 2, 2015
DEREK W. OLIVER
DATE: 06/18/2015

REVISIONS			
NO.	BY	DATE	REMARKS

SHEET INFO		
DESIGNED	—	
DRAWN	—	
CHECKED	—	
APPROVED	—	
LAST EDIT	6/11/2015	
PLOT DATE	6/18/2015	
SUBMITTAL		

TREE REMOVAL PLAN

SEASIDE MUNICIPAL AIRPORT
2015 RUNWAY LIGHTING AND OTHER IMPROVEMENTS

SCALE 1"=60'

PROJECT NUMBER 0005537W
DRAWING FILE NAME 0005537W-AIRP-TR01

SHEET NUMBER
C-8
8 of 19

[DATE: 6/18/2015 1:44 PM] [AUTHOR: lelbert] [PLOTTER: DWG To PDF.pc3] [STYLE: WHP-Standard.ctb]
[PATH: P:\City of Seaside\0005537W\Design\Drawings\Civil\0005537W-AIRP-TR01.dwg] [LAYOUT: C-8 TREE REMOVAL PLAN]

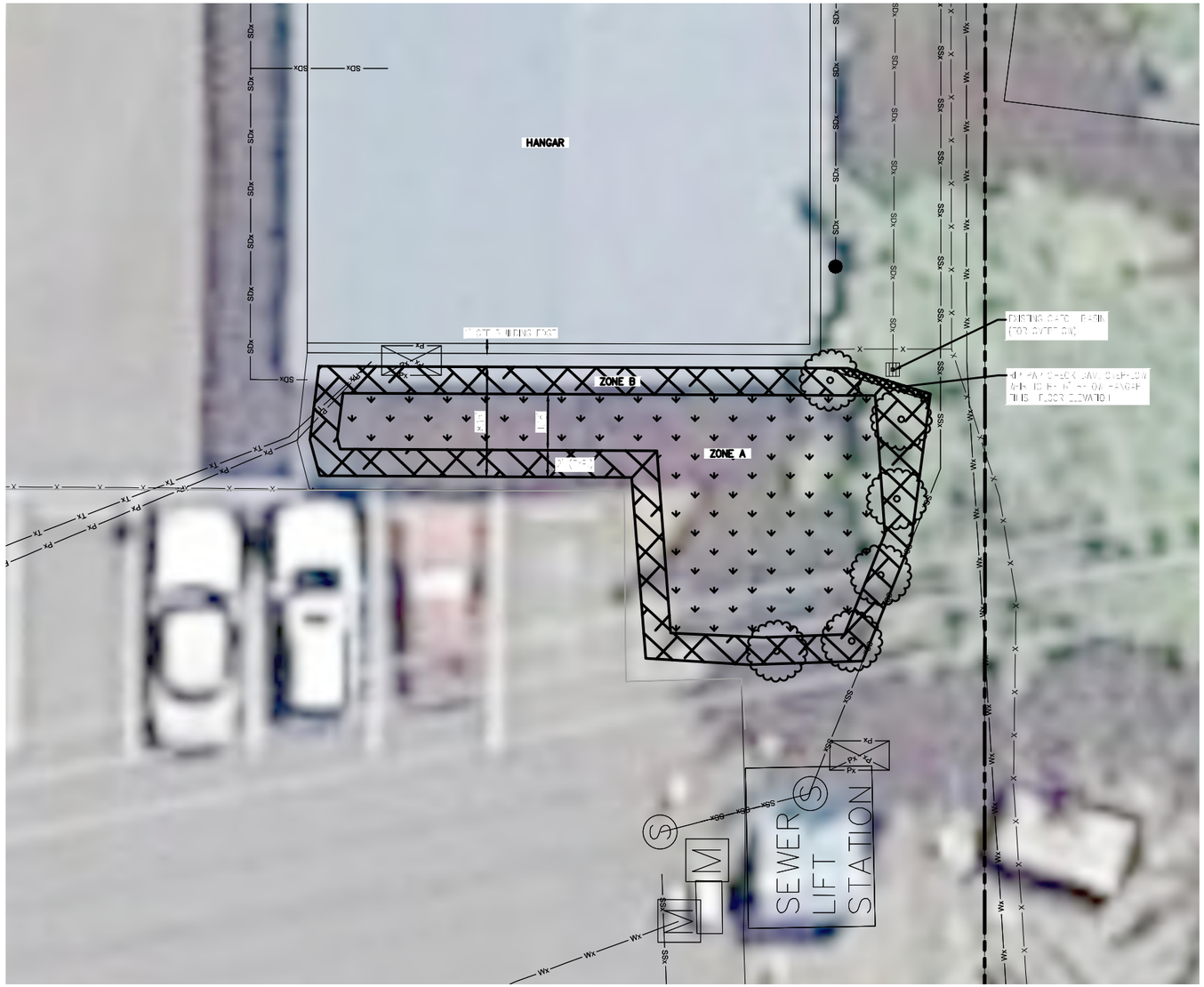

WATER QUALITY SWALE PLAN (1 / C-8)
SCALE: 1"=5'

GENERAL NOTES:

1. CONTRACTOR IS TO BE AWARE THAT THE SOILS ENCOUNTERED IN THIS PROJECT MAY BE GRAVELLY AND CONTAIN COBBLES.
2. ALL EXCESS EXCAVATED MATERIAL SHALL BE HAULED AND DISPOSED OF OFF SITE. DISPOSAL INCIDENTAL TO UNCLASSIFIED EXCAVATION.
3. SEE SHEET L-2 FOR PLANTING DETAILS.

LEGEND:

- SSx — EXISTING SANITARY SEWER
- SDx — EXISTING STORM SEWER
- Px — EXISTING POWER
- Tx — EXISTING TELEPHONE
- Wx — EXISTING WATERLINE
- X — EXISTING FENCE
- ZONE A: WETLAND GRASSES. SEE PLANT MATERIAL LIST, SHEET L-2
- ZONE B: GROUND COVER. SEE PLANT MATERIAL LIST, SHEET L-2
- SHRUBS. SEE SHEET L-2

PRELIMINARY

WHPacific
9755 SW Barnes Rd, Suite 300
Portland, OR 97225
503-626-0455 Fax 503-526-0775
www.whpacific.com

REGISTERED PROFESSIONAL ENGINEER — OREGON — DEREK W. PRELIPCEAN — JAN 2, 2014 — EXPIRES: 12/31/2016

REVISIONS			
NO.	BY	DATE	REMARKS

SHEET INFO	
DESIGNED	—
DRAWN	—
CHECKED	—
APPROVED	—
LAST EDIT	6/11/2015
PLOT DATE	6/18/2015
SUBMITTAL	

WATER QUALITY SWALE PLAN

SEASIDE MUNICIPAL AIRPORT
2015 RUNWAY LIGHTING AND OTHER IMPROVEMENTS

PROJECT NUMBER: 0005537W
DRAWING FILE NAME: 0005537W-AIRP-PL01
SCALE: 1"=5'

SHEET NUMBER
L-1
9 of 19

[DATE: 6/18/2015 1:44 PM] [AUTHOR: leibert] [PLOTTER: DWG To PDF.pc3] [STYLE: WHP-Standard.ctb]
[PATH: P:\City of Seaside\0005537W\Design\Drawings\Civil\0005537W-AIRP-PL01.dwg] [LAYOUT: L-1 WATER QUALITY SWALE PLAN]

WATER QUALITY SWALE - PLANT MATERIALS LIST

ZONE A WETLAND GRASSES			
JUNCUS PATENS	SPREADING RUSH	6" PLUG	ZONE A 18" O.C APPROX. SPACING (230 TOTAL)
ZONE B SHRUBS			
RIBES SANGUINEUM	RED-FLOWERING CURRENT	2 GAL.	ZONE B CONT. @ 4' O.C. SPACING AS SHOWN ON DRAWING (6 TOTAL)
ZONE B GROUND COVER			
ARCTOSTAPHYLOS UVA-URSI	KINNICKINNICK	1 GAL.	ZONE B 18" O.C APPROX. SPACING (80 TOTAL)

GENERAL NOTES

1. COORDINATE WORK WITH OTHER TRADES.
2. CONTRACTOR SHALL VERIFY LOCATIONS OF ALL UTILITIES PRIOR TO WORK. FIELD ADJUST FINAL TREE PLANTING LOCATIONS TO AVOID CONFLICTS.
3. CONTRACTOR SHALL NOTIFY THE ENGINEER WHEN PLANTINGS HAVE BEEN INSTALLED.
4. ALL PLANTS SHALL CONFORM TO AMERICAN ASSOCIATION OF NURSERYMEN GRADES AND STANDARDS PER THE 'AMERICAN STANDARD FOR NURSERY STOCK' MANUAL, CURRENT EDITION
5. DO NOT WILLFULLY PLACE PLANT MATERIAL IN INAPPROPRIATE LOCATIONS. IF PLANT LOCATIONS SHOWN ON THE PLAN HAVE OBSTRUCTIONS OR LIMITATIONS IN THE FIELD, PROVIDE FIELD ADJUSTMENTS AND NOTIFY LANDSCAPE ARCHITECT OR OWNERS REPRESENTATIVE FOR APPROVAL PRIOR TO PLANTING.
6. PLANT MATERIAL SHALL BE PLANTED WITHIN ONE WEEK OF DELIVERY TO SITE. DELIVERY SHOULD BE POSTPONED DURING EXTREME WEATHER CONDITIONS. ONCE DELIVERED, PROTECT ALL MATERIAL FROM EXPOSURE TO SUN, WIND, FREEZING, OR OTHER CONDITIONS THAT DECREASE THE VIGOR OF THE PLANT.
7. IMPORTED TOPSOIL:

   THE IMPORTED TOPSOIL SHALL BE A NATURAL FRIABLE SANDY LOAM SOIL AND SHALL BE REASONABLY FREE FROM TOPSOIL, CLAY LUMPS, STONE, OR SIMILAR OBJECTS LARGER THAN ½ INCH IN GREATEST DIAMETER, BRUSH, STUMPS, ROOTS, OBJECTIONABLE WEEDS OR LITTER, GROWTH OR A HINDRANCE TO SUBSEQUENT SMOOTH GRADING, AND MAINTENANCE OPERATIONS.
8. COMPOST:

   COMPOST SHALL BE A COMMERCIALLY MANUFACTURED MATERIAL, MEDIUM GRIND, MADE FROM DEAD PLANT MATERIAL SUCH AS GRASS CLIPPINGS, WEEDS, GREEN AND DEAD DRY LEAVES, GARDEN AND VEGETABLE MATERIAL, AND GROUND BRANCHES OF TREES AND SHRUBS; ANIMAL WASTE IS NOT ALLOWED. FURNISH A PRODUCT THAT IS COMPOSTED UNDER CONTROLLED AEROBIC DECOMPOSITION, WITH THE INTERNAL TEMPERATURE REACHING 57 DEGREES CELSIUS (135 DEGREES F) FOR 15 DAYS, WITHOUT EXCEEDING 68 DEGREES CELSIUS (155 DEGREES F). ENSURE THAT IT CONTAINS LESS THAN 10% BACTERIA AND LESS THAN 10% FUNGUS, IS A MATURE COMPOST, AND DOES NOT CONTAIN DETRIMENTAL COMPONENTS. IF IT CONTAINS MORE THAN 10% BACTERIA AND/OR FUNGUS, IT IS LIKELY NOT MATURE COMPOST AND WILL NOT BE ACCEPTABLE.
9. SOIL PREPARATION:

   PRIOR TO AMMENDING SOIL, SPRAY ALL AREAS TO BE PLANTED AND MULCHED WHERE WEEDS OR GRASS ARE GROWING WITH "ROUNDUP" AT A 2% SOLUTION. ALWAYS FOLLOW WEED CONTROL CONTAINER LABEL DIRECTIONS. SPRAY WORK SHALL BE DONE BY A SPRAY APPLICATOR LICENSED IN THE STATE. DO NOT DO ANY WORK IN THE AREAS SPRAYED FOR A MINIMUM OF 7 DAYS AFTER SPRAYING. SPRAYING SHALL BE INCIDENTAL TO PLANTING AND MULCHING.

   TOPSOIL TO BE PLACED IN THE WATER QUALITY SWALE AT A DEPTH OF 18". NO ADDITIONAL TOPSOIL IS REQUIRED FOR OTHER PLANTING AREAS. APPLY AS NEEDED IF POOR SOIL CONDITIONS EXIST. AMMEND ALL PLANTING AREAS BY INCOORPORATING 2 INCHES OF COMPOST INTO THE TOP 6" OF TOPSOIL. FULLY INCOORPORATE BY DISCING, TILING, HAND SPADING, OR OTHER METHODS TO A MINIMUM DEPTH OF 6". INCOORPORATE GRANULAR YPSUM AT A RATE OF 100 POUNDS PER 1,000 SQUARE FEET INTO THE TOPSOIL.
10. BARK MULCH:

    COMMERCIAL PRODUCT, MEDIUM GROUND BARK MULCH. BARK SHALL BE GROUND FIR OR HEMLOCK BARK OF UNIFORM COLOR, FREE FROM WEEDS, SEED, SAWDUST, AND SPLINTERS AND SHALL NOT CONTAIN RESIN, TANNIN, WOOD FIBER OR OTHER COMPOUNDS DETRIMENTAL TO PLANT LIFE. SOURCE SHALL BE FROM FRESHWATER MILL. SPREAD BARK MULCH AT A DEPTH OF 2.5" IN ALL PLANTING AREAS AND OTHER AREAS INDICATED ON THE PLANS. DO NOT SPREAD BARK MULCH BELOW THE MAX WATER LEVEL IN THE WATER QUALITY SWALES.

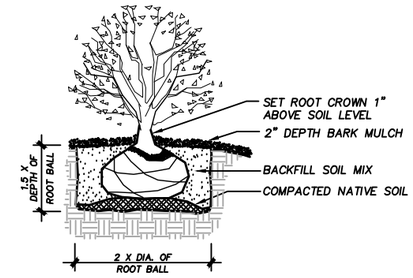

SHRUB PLANTING DETAIL (1 / C12.0)
SCALE: N.T.S.

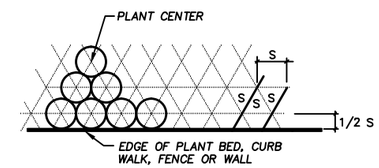

S = SPACING ON CENTER (O.C) AS SHOWN ON PLANT LIST

GROUNDCOVER SPACING DETAIL (2 / C12.0)
SCALE: N.T.S.

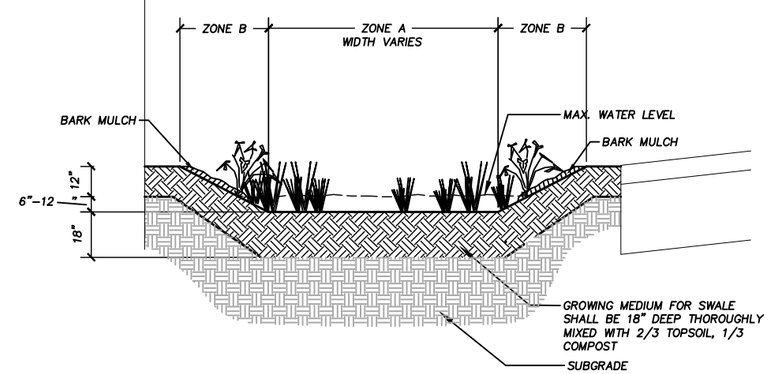

WATER QUALITY SWALE SECTION (3 / C12.0)
SCALE: N.T.S.

PRELIMINARY

WHPacific
9755 SW Barnes Rd, Suite 300
Portland, OR 97225
503-626-0455 Fax 503-526-0775
www.whpacific.com

REGISTERED PROFESSIONAL ENGINEER — PRELIMINARY — OREGON JAN 2, 2014 — DEREK W. [illegible]
DATE: 06/18/2015

REVISIONS			
NO.	BY	DATE	REMARKS

SHEET INFO	
DESIGNED	—
DRAWN	—
CHECKED	—
APPROVED	—
LAST EDIT	6/11/2015
PLOT DATE	6/18/2015
SUBMITTAL	

SWALE PLANTING DETAILS

SEASIDE MUNICIPAL AIRPORT
2015 RUNWAY LIGHTING AND OTHER IMPROVEMENTS

SCALE: N.T.S.

PROJECT NUMBER: 0005537W
DRAWING FILE NAME: 0005537W-AIRP-PL01

SHEET NUMBER
L-2
10 of 19

[DATE: 6/18/2015 1:44 PM] [AUTHOR: leibert] [PLOTTER: DWG To PDF.pc3] [STYLE: WHP-Standard.ctb]
[PATH: P:\City of Seaside\0005537W\Design\Drawings\C-01\0005537W-AIRP-PL01.dwg] [LAYOUT: L-2 SWALE PLANTING DETAILS]

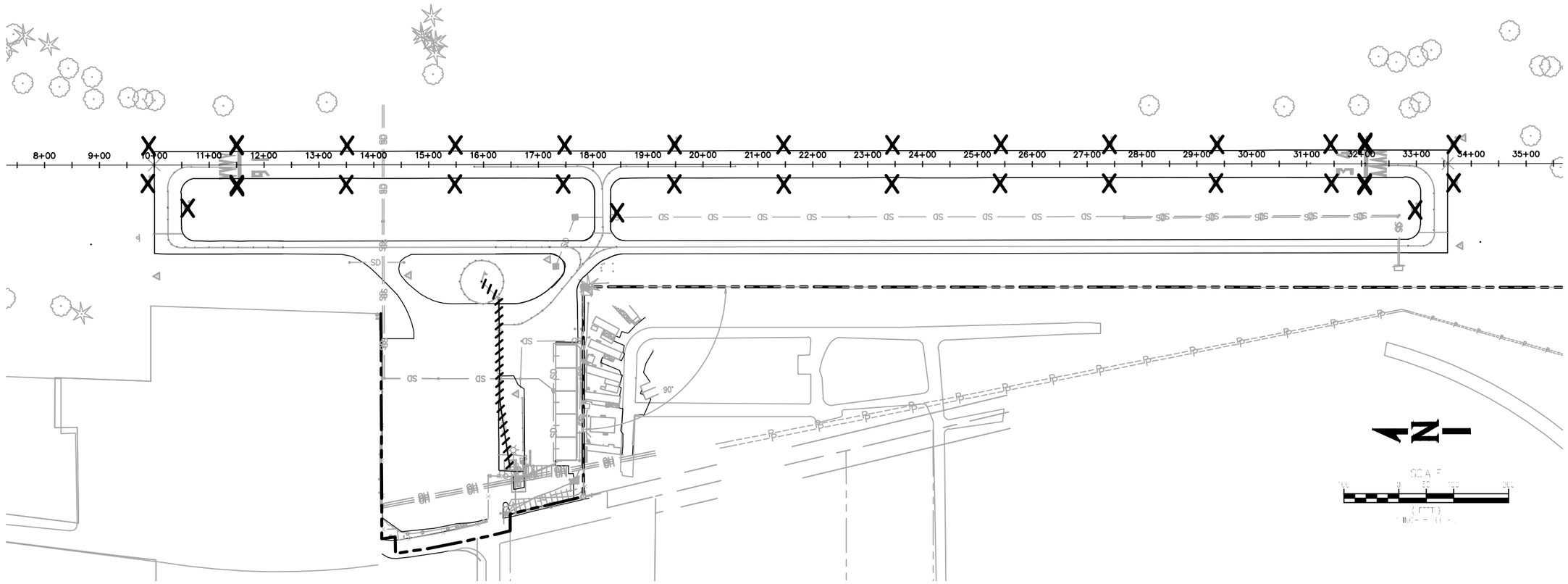

ELECTRICAL DEMOLITION PLAN
SCALE: 1"=100'

1
E-1

LEGEND:

X — ***EXISTING LIGHT TO BE REMOVED BY CONTRACTOR AND DISPOSED OF OFF-SITE***

////// — ***REMOVE AND DISPOSE OF EXISTING CONDUCTORS IN EXISTING CONDUITS TO REMAIN.***

GENERAL NOTES:

1. ***EXISTING CIRCUIT IS DIRECT BURIED CONDUCTORS. ABANDON IN PLACE AND ADJUST AS NEEDED FOR NEW CONDUITS.***

PRELIMINARY

WHPacific
9755 SW Barnes Rd, Suite 300
Portland, OR 97225
503-626-0455 Fax 503-526-0775
www.whpacific.com

REGISTERED PROFESSIONAL ENGINEER
PRELIMINARY
JAN 2, 2015
DEREK W. OJA
OREGON
EXPIRES: 12/31/2015

REVISIONS			
NO.	BY	DATE	REMARKS

SHEET INFO	
DESIGNED	—
DRAWN	—
CHECKED	—
APPROVED	—
LAST EDIT	6/12/2015
PLOT DATE	6/18/2015
SUBMITTAL	

ELECTRICAL DEMOLITION PLAN

SEASIDE MUNICIPAL AIRPORT
2015 RUNWAY LIGHTING AND OTHER IMPROVEMENTS

SCALE: 1"=100'

PROJECT NUMBER: 0005537W

DRAWING FILE NAME: 0005537W-AIRP-EL00

SHEET NUMBER
E-1
11 of 19

[DATE: 6/18/2015 1:45 PM] [AUTHOR: ieberr1] [PLOTTER: DWG To PDF.pc3] [STYLE: WHP-Standard.ctb]
[PATH: P:\City of Seaside\0005537W\Design\Drawings\CAD\0005537W-AIRP-EL00.dwg] [LAYOUT: E-1 ELECTRICAL DEMOLITION PLAN]

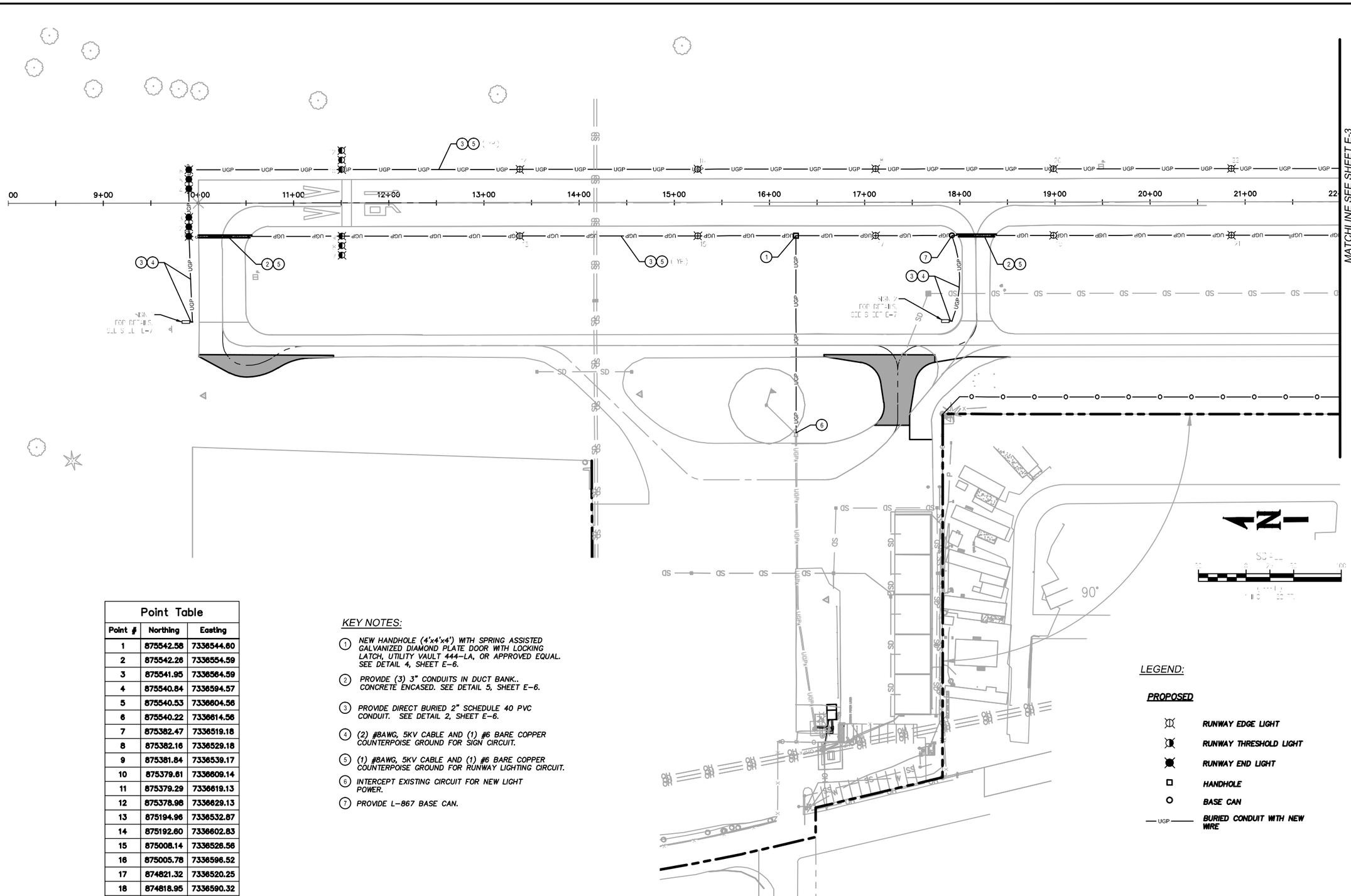

RUNWAY LIGHTING PLAN (1 OF 2)
SCALE: 1"=50'
1
E-2

Point Table		
Point #	Northing	Easting
1	875542.58	7336544.60
2	875542.26	7336554.59
3	875541.95	7336564.59
4	875540.84	7336594.57
5	875540.53	7336604.56
6	875540.22	7336614.56
7	875382.47	7336519.18
8	875382.16	7336529.18
9	875381.84	7336539.17
10	875379.61	7336609.14
11	875379.29	7336619.13
12	875378.98	7336629.13
13	875194.96	7336532.87
14	875192.60	7336602.83
15	875008.14	7336526.56
16	875005.78	7336596.52
17	874821.32	7336520.25
18	874818.95	7336590.32
19	874634.49	7336513.95
20	874632.13	7336583.91
21	874447.67	7336507.64
22	874445.31	7336577.60

KEY NOTES:

1. NEW HANDHOLE (4'x4'x4') WITH SPRING ASSISTED GALVANIZED DIAMOND PLATE DOOR WITH LOCKING LATCH, UTILITY VAULT 444-LA, OR APPROVED EQUAL. SEE DETAIL 4, SHEET E-6.
2. PROVIDE (3) 3" CONDUITS IN DUCT BANK.. CONCRETE ENCASED. SEE DETAIL 5, SHEET E-6.
3. PROVIDE DIRECT BURIED 2" SCHEDULE 40 PVC CONDUIT. SEE DETAIL 2, SHEET E-6.
4. (2) #8AWG, 5KV CABLE AND (1) #6 BARE COPPER COUNTERPOISE GROUND FOR SIGN CIRCUIT.
5. (1) #8AWG, 5KV CABLE AND (1) #6 BARE COPPER COUNTERPOISE GROUND FOR RUNWAY LIGHTING CIRCUIT.
6. INTERCEPT EXISTING CIRCUIT FOR NEW LIGHT POWER.
7. PROVIDE L-867 BASE CAN.

LEGEND:

PROPOSED

- RUNWAY EDGE LIGHT
- RUNWAY THRESHOLD LIGHT
- RUNWAY END LIGHT
- HANDHOLE
- BASE CAN
- UGP — BURIED CONDUIT WITH NEW WIRE

PRELIMINARY

WHPacific
9755 SW Barnes Rd, Suite 300
Portland, OR 97225
503-626-0455 Fax 503-526-0775
www.whpacific.com

REGISTERED PROFESSIONAL ENGINEER — OREGON — DEREK W. LEIBERT — JAN 2, 2016 — PRELIMINARY — DATE: 00/00/2016

REVISIONS			
NO.	BY	DATE	REMARKS

SHEET INFO	
DESIGNED	—
DRAWN	—
CHECKED	—
APPROVED	—
LAST EDIT	6/11/2015
PLOT DATE	6/18/2015
SUBMITTAL	

RUNWAY LIGHTING PLAN (1 OF 2)

SEASIDE MUNICIPAL AIRPORT
2015 RUNWAY LIGHTING AND OTHER IMPROVEMENTS

SCALE 1"=50'

PROJECT NUMBER 0005537W
DRAWING FILE NAME 0005537W-AIRP-EL01

SHEET NUMBER
E-2

[DATE: 6/18/2015 1:45 PM] [AUTHOR: leibert] [PLOTTER: DWG To PDF.pc3] [STYLE: WHP-Standard.ctb]
[PATH: P:\City of Seaside\0005537W\Design\Drawings\Civil\0005537W-AIRP-EL01.dwg] [LAYOUT: E-2 RUNWAY LIGHTING PLAN]

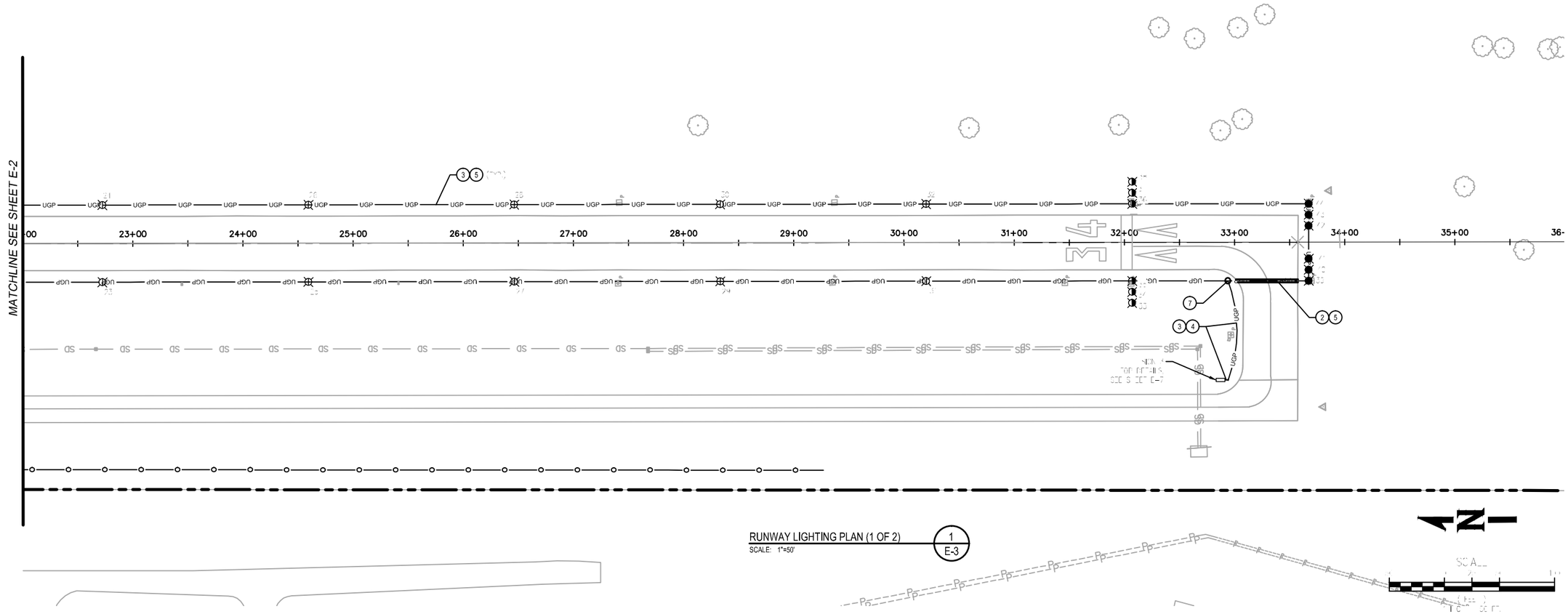

RUNWAY LIGHTING PLAN (1 OF 2) 1 / E-3

SCALE: 1"=50'

Point Table		
Point #	Northing	Easting
23	874260.85	7336501.13
24	874258.48	7336571.30
25	874074.02	7336495.03
26	874071.66	7336564.99
27	873887.20	7336488.73
28	873884.84	7336558.69
29	873700.37	7336482.42
30	873698.01	7336552.38
31	873513.55	7336476.12
32	873511.19	7336546.08
33	873327.44	7336449.82
34	873327.08	7336459.82
35	873326.73	7336469.81
36	873324.28	7336539.72
37	873323.92	7336549.76
38	873323.57	7336559.76
39	873166.53	7336464.41
40	873166.18	7336474.40
41	873165.82	7336484.39
42	873164.88	7336514.38
43	873164.53	7336524.37

LEGEND:

PROPOSED

- RUNWAY EDGE LIGHT
- RUNWAY THRESHOLD LIGHT
- RUNWAY END LIGHT
- HANDHOLE
- BASE CAN
- BURIED CONDUIT WITH NEW WIRE

KEY NOTES:

1. NEW HANDHOLE (4'x4'x4') WITH SPRING ASSISTED GALVANIZED DIAMOND PLATE DOOR WITH LOCKING LATCH, UTILITY VAULT 444–LA, OR APPROVED EQUAL. SEE DETAIL 4, SHEET E–6.
2. PROVIDE (3) 3" CONDUITS IN DUCT BANK.. CONCRETE ENCASED. SEE DETAIL 5, SHEET E–6.
3. PROVIDE DIRECT BURIED 2" SCHEDULE 40 PVC CONDUIT. SEE DETAIL 2, SHEET E–6.
4. (2) #8AWG, 5KV CABLE AND (1) #6 BARE COPPER COUNTERPOISE GROUND FOR SIGN CIRCUIT.
5. (1) #8AWG, 5KV CABLE AND (1) #6 BARE COPPER COUNTERPOISE GROUND FOR RUNWAY LIGHTING CIRCUIT.
6. INTERCEPT EXISTING CIRCUIT FOR NEW LIGHT POWER.
7. PROVIDE L–867 BASE CAN.

PRELIMINARY

WHPacific
9755 SW Barnes Rd, Suite 300
Portland, OR 97225
503-626-0455 Fax 503-526-0775
www.whpacific.com

REGISTERED PROFESSIONAL ENGINEER — OREGON — DEREK W. JAN 2, 2015 — PRELIMINARY — EXPIRES: 12/31/2016

REVISIONS			
NO.	BY	DATE	REMARKS

SHEET INFO	
DESIGNED	–
DRAWN	–
CHECKED	–
APPROVED	–
LAST EDIT	6/11/2015
PLOT DATE	6/18/2015
SUBMITTAL	

RUNWAY LIGHTING PLAN (2 OF 2)

SEASIDE MUNICIPAL AIRPORT
2015 RUNWAY LIGHTING AND OTHER IMPROVEMENTS

SCALE 1"=50'

PROJECT NUMBER 0005537W

DRAWING FILE NAME 0005537W-AIRP-EL01

SHEET NUMBER E-3

[DATE: 6/18/2015 1:45 PM] [AUTHOR: leibert] [PLOTTER: DWG To PDF.pc3] [STYLE: WHP-Standard.ctb]
[LTH: P:\City of Seaside\0005537W\Design\Drawings\Civil\0005537W-AIRP-EL01.dwg] [LAYOUT: E-3 RUNWAY LIGHTING PLAN]

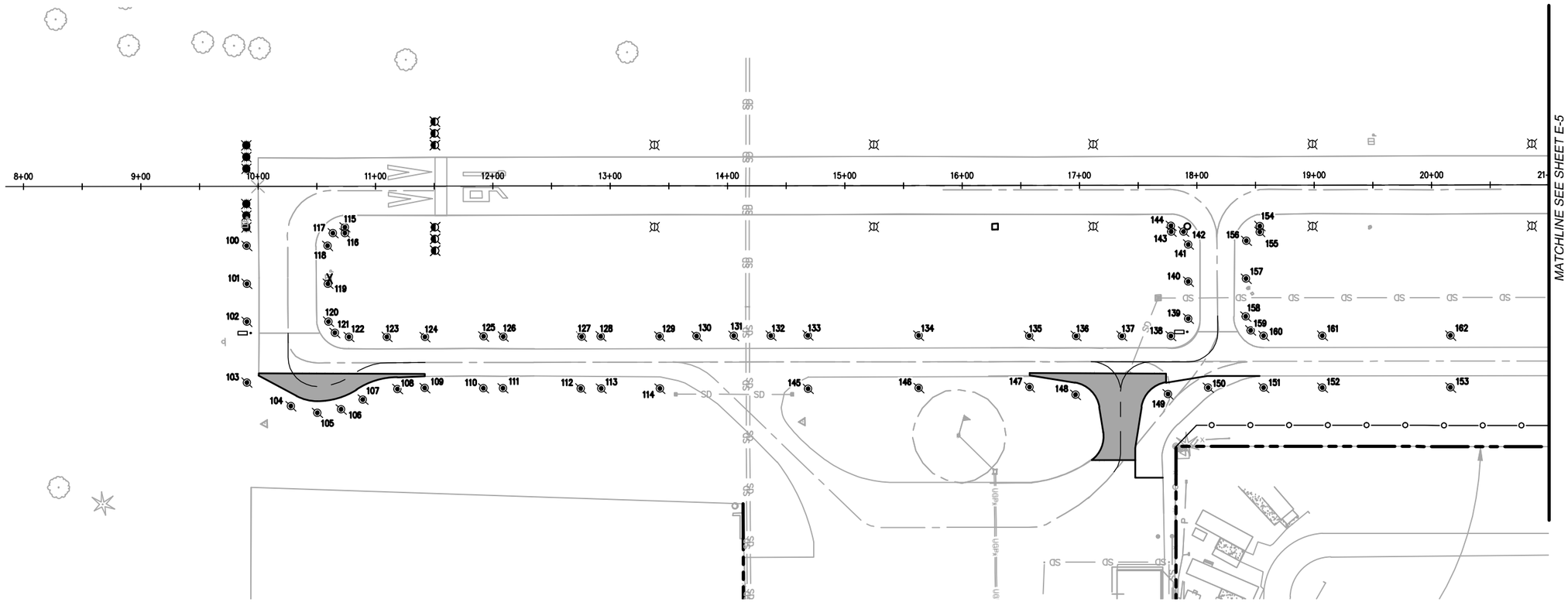

Point Table		
Point #	Northing	Easting
100	875542.76	7336528.85
101	875543.85	7336496.54
102	875544.94	7336464.23
103	875546.73	7336412.37
104	875509.95	7336390.94
105	875487.63	7336384.50
106	875467.30	7336386.70
107	875448.39	7336394.49
108	875418.64	7336402.45
109	875395.37	7336402.43
110	875345.46	7336400.56
111	875328.86	7336399.95
112	875262.69	7336397.46
113	875245.19	7336396.81
114	875195.22	7336394.94
115	875458.66	7336541.77
116	875458.83	7336536.77
117	875468.96	7336537.12
118	875474.02	7336526.53
119	875474.72	7336494.21
120	875475.42	7336461.89

Point Table		
Point #	Northing	Easting
121	875470.37	7336452.12
122	875458.47	7336448.24
123	875428.13	7336447.17
124	875393.80	7336445.94
125	875343.81	7336444.68
126	875327.08	7336443.97
127	875260.37	7336441.63
128	875243.93	7336441.36
129	875193.87	7336439.49
130	875162.26	7336438.60
131	875130.68	7336437.70
132	875099.08	7336436.81
133	875067.53	7336435.92
134	874973.30	7336432.44
135	874879.15	7336428.96
136	874839.18	7336427.49
137	874800.20	7336426.07
138	874758.48	7336424.55
139	874743.01	7336438.85
140	874741.95	7336470.45
141	874740.88	7336502.05

Point Table		
Point #	Northing	Easting
142	874744.52	7336513.20
143	874755.15	7336513.49
144	874754.98	7336518.48
145	875068.93	7336390.36
146	874974.65	7336387.77
147	874880.38	7336385.18
148	874841.42	7336377.36
149	874762.71	7336375.16
150	874728.18	7336379.52
151	874680.95	7336377.76
152	874630.92	7336376.09
153	874521.75	7336372.44
154	874679.40	7336515.62
155	874679.62	7336510.63
156	874691.29	7336503.50
157	874692.70	7336471.23
158	874694.11	7336438.96
159	874690.38	7336426.99
160	874679.42	7336422.00
161	874629.44	7336420.34
162	874520.27	7336416.69

SCALE
50 0 25 50 100
(FEET)
1 INCH = 50 FT.

LEGEND:

- *RUNWAY EDGE LIGHT*
- *RUNWAY THRESHOLD LIGHT*
- *RUNWAY END LIGHT*
- *TAXIWAY REFLECTOR*
- *EXISTING EDGE OF PAVEMENT*
- *PROPOSED EDGE OF PAVEMENT*

PRELIMINARY

WHPacific
9755 SW Barnes Rd, Suite 300
Portland, OR 97225
503-626-0455 Fax 503-526-0775
www.whpacific.com

REGISTERED PROFESSIONAL ENGINEER
OREGON
JAN 2, 1996
DEREK W. OLEN
EXPIRES: 12/31/2015

REVISIONS

NO.	BY	DATE	REMARKS

SHEET INFO	
DESIGNED	—
DRAWN	—
CHECKED	—
APPROVED	—
LAST EDIT	6/12/2015
PLOT DATE	6/18/2015
SUBMITTAL	

RETROREFLECTIVE PLAN (1 OF 2)

SEASIDE MUNICIPAL AIRPORT
2015 RUNWAY LIGHTING AND OTHER IMPROVEMENTS

SCALE: ---

PROJECT NUMBER: 0005537W
DRAWING FILE NAME: 0005537W-AIRP-EL05

SHEET NUMBER
E-4
14 of 19

[DATE: 6/18/2015 1:46 PM] [AUTHOR: lelbert] [PLOTTER: DWG To PDF.pc3] [STYLE: WHP-Standard.ctb]
[PATH: P:\City of Seaside\0005537W\Design\Drawings\Civil\0005537W-AIRP-EL05.dwg] [LAYOUT: Reflectors (1)]

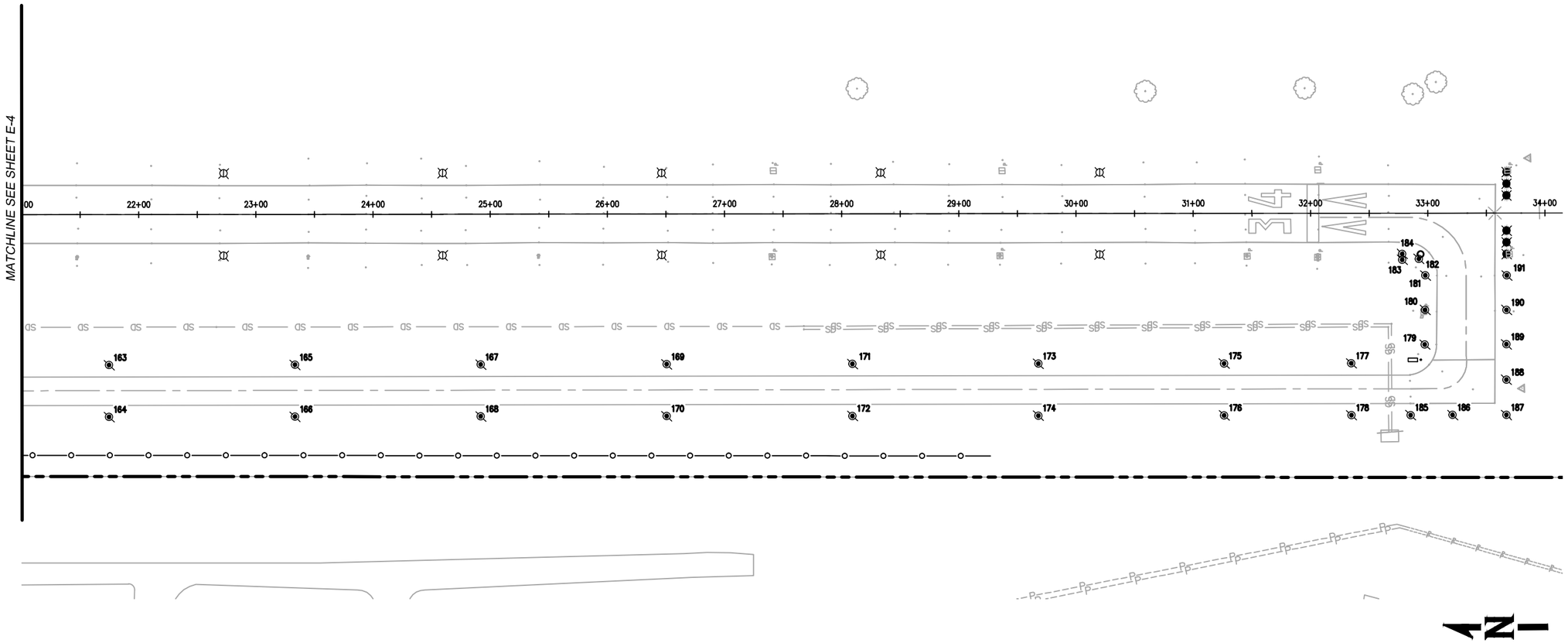

Point Table		
Point #	Northing	Easting
163	874361.76	7336411.39
164	874363.24	7336367.15
165	874203.25	7336406.09
166	874204.73	7336361.85
167	874044.74	7336400.79
168	874046.22	7336356.55
169	873886.23	7336395.49
170	873887.70	7336351.26
171	873727.71	7336390.20
172	873729.19	7336345.96
173	873569.20	7336384.90
174	873570.68	7336340.67
175	873410.69	7336379.60
176	873412.17	7336335.37
177	873302.15	7336375.97
178	873303.63	7336331.74
179	873238.93	7336389.71
180	873237.65	7336419.26
181	873236.38	7336448.59
182	873241.49	7336462.94

Point Table		
Point #	Northing	Easting
183	873255.66	7336462.66
184	873255.51	7336467.65
185	873253.22	7336330.06
186	873217.33	7336328.85
187	873171.46	7336327.29
188	873170.47	7336357.40
189	873169.43	7336387.50
190	873168.16	7336416.83
191	873166.88	7336446.15

SCALE

50 0 25 50 100

(FEET)
1 INCH = 50 FT.

LEGEND:

- ***RUNWAY EDGE LIGHT***
- ***RUNWAY THRESHOLD LIGHT***
- ***RUNWAY END LIGHT***
- ***TAXIWAY REFLECTOR***
- ***EXISTING EDGE OF PAVEMENT***
- ***PROPOSED EDGE OF PAVEMENT***

PRELIMINARY

WHPacific
9755 SW Barnes Rd, Suite 300
Portland, OR 97225
503-626-0455 Fax 503-526-0775
www.whpacific.com

REGISTERED PROFESSIONAL ENGINEER
OREGON
JAN 2, 1996
DEREK W. JOHNSON
EXPIRES: 12/31/2015

REVISIONS

NO.	BY	DATE	REMARKS

SHEET INFO	
DESIGNED	—
DRAWN	—
CHECKED	—
APPROVED	—
LAST EDIT	6/12/2015
PLOT DATE	6/18/2015
SUBMITTAL	

RETROREFECTIVE PLAN (2 OR 2)

SEASIDE MUNICIPAL AIRPORT
2015 RUNWAY LIGHTING AND OTHER IMPROVEMENTS

SCALE: ---

PROJECT NUMBER: 0005537W
DRAWING FILE NAME: 0005537W-AIRP-EL05

SHEET NUMBER
E-5
15 of 19

[DATE: 6/18/2015 1:46 PM] [AUTHOR: lelbert] [PLOTTER: DWG To PDF.pc3] [STYLE: WHP-Standard.ctb]
[PATH: P:\City of Seaside\0005537W\Design\Drawings\Civil\0005537W-AIRP-EL05.dwg] [LAYOUT: Reflectors (2)]

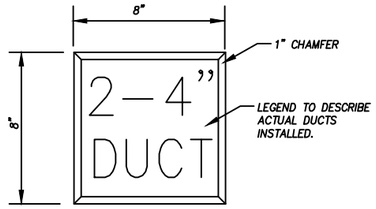

TOP VIEW

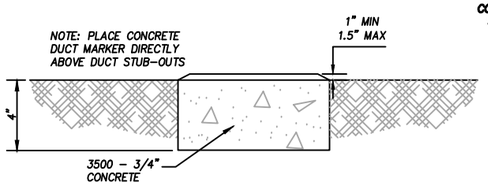

ELEVATION

DUCT MARKER 1 / E-6
SCALE: N.T.S.

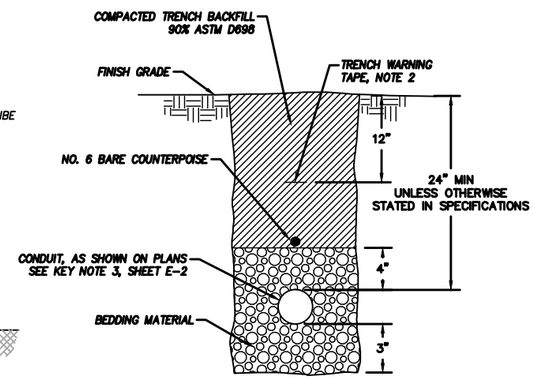

CONDUIT TRENCH
NON-PAVED AREA DETAIL 2 / E-6
SCALE: N.T.S.

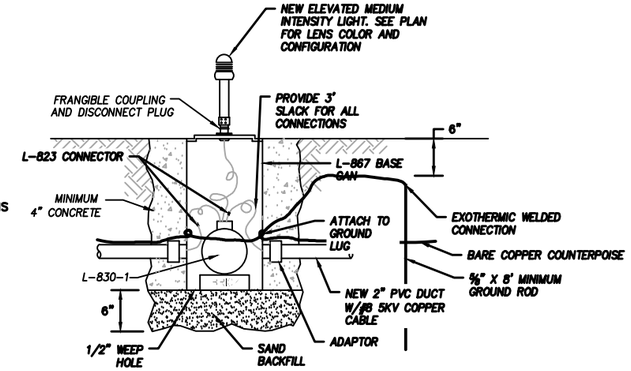

THRESHOLD LIGHT DETAIL 3 / E-6
SCALE: N.T.S.

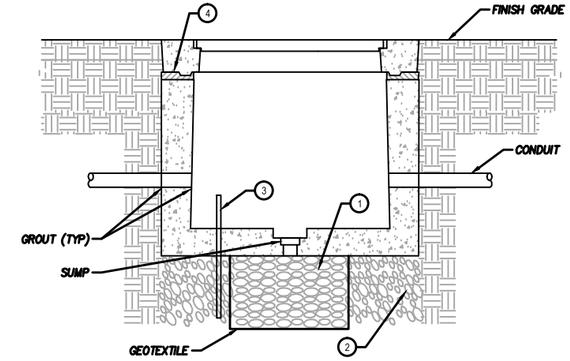

NOTES:

1. PROVIDE 1' X 1' X 3' DEEP, 3 CF OF 1"-1-½" ROUND ROCK BELOW SUMP.
2. PROVIDE COMPACTED ¾" MINUS 12" DEEP MINIMUM CRUSHED ROCK.
3. PROVIDE CU COATED 10 FT GROUND ROD.
4. USE NON-SHRINK GROUT TO SEAL AND BOND TOP TO BASE.

HANDHOLE 4 / E-6
SCALE: N.T.S.

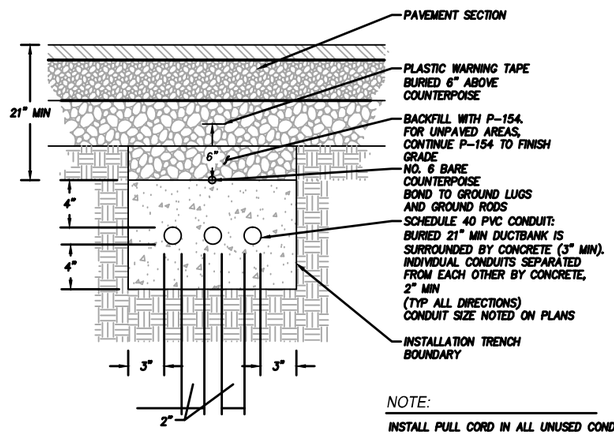

NOTE:

INSTALL PULL CORD IN ALL UNUSED CONDUITS.

TYPICAL CONCRETE ENCASED
DUCTBANK DETAILS 5 / E-6
SCALE: N.T.S.

PRELIMINARY

WHPacific
9755 SW Barnes Rd, Suite 300
Portland, OR 97225
503-626-0455 Fax 503-526-0775
www.whpacific.com

REGISTERED PROFESSIONAL ENGINEER — PRELIMINARY — DEREK W. OTTO — JUN 2, 2015

REVISIONS			
NO.	BY	DATE	REMARKS

SHEET INFO	
DESIGNED	—
DRAWN	—
CHECKED	—
APPROVED	—
LAST EDIT	6/11/2015
PLOT DATE	6/18/2015
SUBMITTAL	

ELECTRICAL DETAILS

SEASIDE MUNICIPAL AIRPORT
2015 RUNWAY LIGHTING AND OTHER IMPROVEMENTS

SCALE: ----

PROJECT NUMBER: 0005537W
DRAWING FILE NAME: 0005537W-AIRP-EL02

SHEET NUMBER
E-6
16 of 19

[DATE: 6/18/2015 1:46 PM] [AUTHOR: lelber1] [PLOTTER: DWG To PDF.pc3] [STYLE: WHP-Standard.ctb]
[PATH: P:\City of Seaside\0005537W\Design\Drawings\CAD\0005537W-AIRP-EL02.dwg] [LAYOUT: E-4 ELECTRICAL DETAILS]

SIGN SCHEDULE						
SIGN	SIDE	SIDE OF PAVEMENT	PROPOSED SIGN LEGEND (SIGN COLOR)		REFERENCE POINT	
					NORTHING	EASTING
1	A	L	A1 (YEL ON BLK)	16 (WHT ON RED)	875544.98	7336454.63
	B	R	A1 (YEL ON BLK)			
2	A	L	A2 (YEL ON BLK)	16–34 (WHT ON RED)	874747.26	7336427.70
	B	R	A2 (YEL ON BLK)			
3	A	L	A3 (YEL ON BLK)	34 (WHT ON RED)	873245.75	7336377.03
	B	R	A3 (YEL ON BLK)			

GENERAL NOTES:

1. FOR THE REFERENCE POINT LOCATION, SEE DETAIL 1/E-7
2. SIDE FACE:
   SIGN SIDE A = SIDE VISIBLE BY AIRCRAFT APPROACHING RUNWAY
   SIGN SIDE B = SIDE VISIBLE BY AIRCRAFT EXITING RUNWAY
3. SIGN LEGEND COLORS ARE AS FOLLOWS:
   BLK = BLACK
   RED = RED
   WHT = WHITE
   YEL = YELLOW
4. SIGN SIZE, COLORS, LEGENDS, AND SUPPORTS SHALL BE IN ACCORDANCE WITH SECTION 16970.

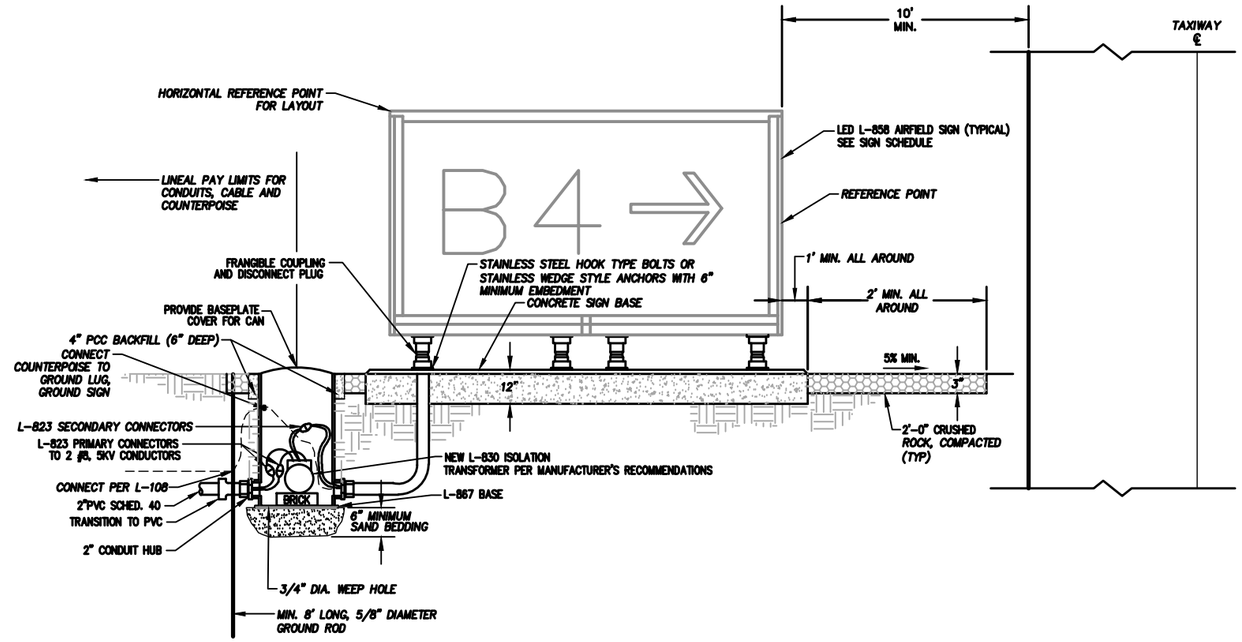

SIGN FOUNDATION SECTION (1 / E-7)
SCALE: N.T.S.

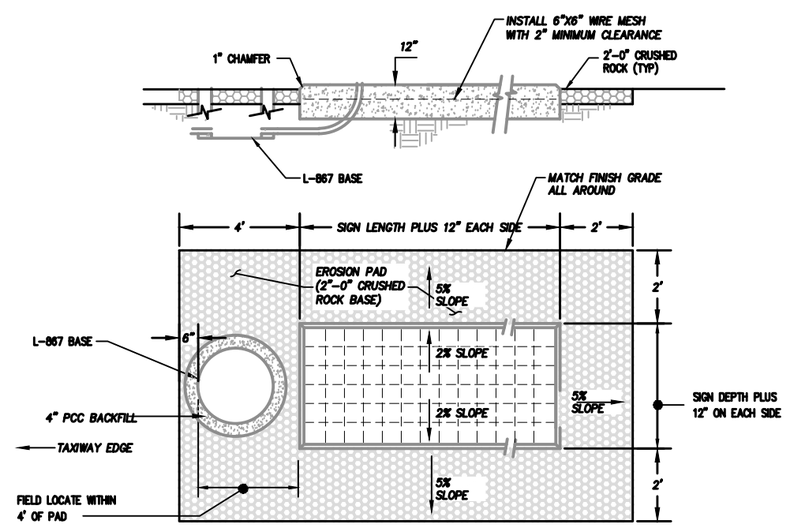

SIGN FOUNDATION PLAN (2 / E-7)
SCALE: N.T.S.

PRELIMINARY

WHPacific
9755 SW Barnes Rd, Suite 300
Portland, OR 97225
503-626-0455 Fax 503-526-0775
www.whpacific.com

REGISTERED PROFESSIONAL ENGINEER — PRELIMINARY — JAN 2, 2016 — DEREK W. OLIVER

DATE: 06/18/2015

REVISIONS			
NO.	BY	DATE	REMARKS

SHEET INFO	
DESIGNED	—
DRAWN	—
CHECKED	—
APPROVED	—
LAST EDIT	6/11/2015
PLOT DATE	6/18/2015
SUBMITTAL	

SIGNAGE DETAILS

SEASIDE MUNICIPAL AIRPORT
2015 RUNWAY LIGHTING AND OTHER IMPROVEMENTS

SCALE: ---

PROJECT NUMBER: 0005537W
DRAWING FILE NAME: 0005537W-AIRP-EL02

SHEET NUMBER
E-7
17 of 19

[DATE: 6/18/2015 1:46 PM] [AUTHOR: lelber1] [PLOTTER: DWG To PDF.pc3] [STYLE: WHP-Standard.ctb]
[PATH: P:\City of Seaside\0005537W\Design\Drawings\CD\0005537W-AIRP-EL02.dwg] [LAYOUT: SIGNAGE DETAILS]

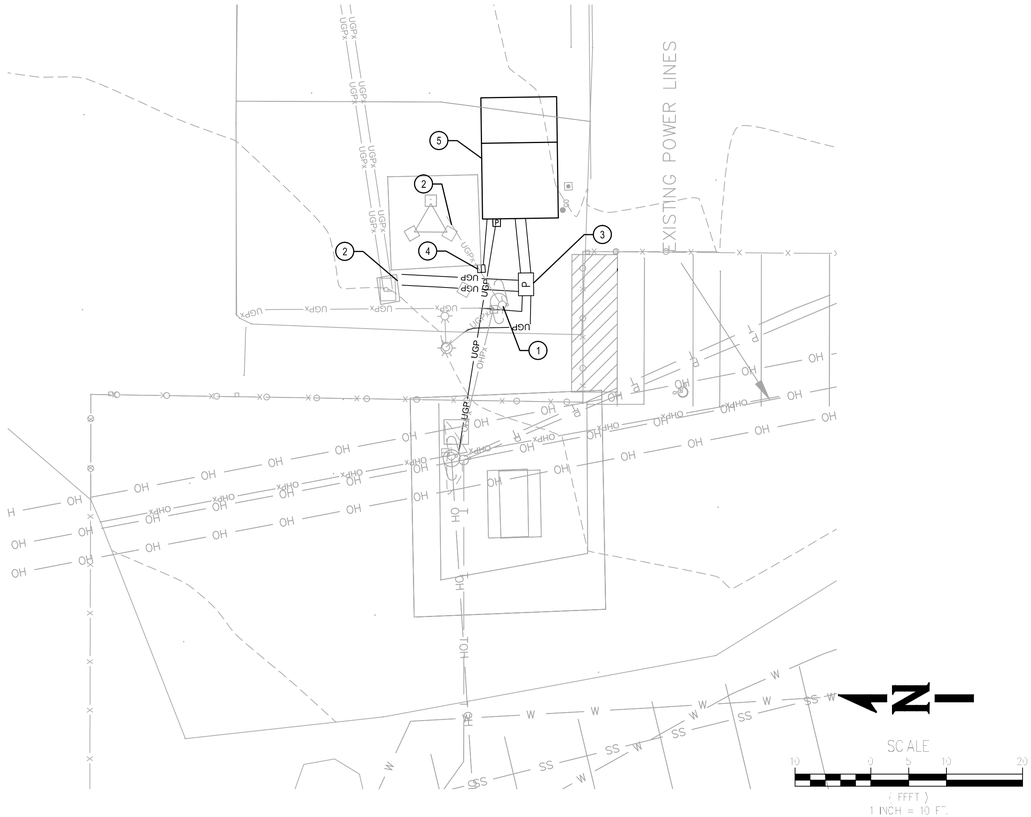

ELECTRICAL BUILDING PLAN (1 / E-8)
SCALE: 1"=10'

GENERAL NOTES:

1. CONTRACTOR TO PROVIDE PRIVATE LOCATES FOR UNDERGROUND PRIOR TO DIGGING.
2. ALL ELECTRICAL WORK TO BE INSTALLED ACCORDING TO APPROPRIATE LOCAL, STATE, AND/OR FEDERAL CODE. ALL REQUIRED AND NECESSARY PERMITS TO BE OBTAINED BY THE CONTRACTOR AND CONSIDERED INCIDENTAL TO OVERALL CONTRACT.
3. CONTRACTOR WILL HAVE A MAXIMUM OF 30 CALENDAR DAYS TO ENERGIZE NEW RUNWAY LIGHTING.

KEYNOTES:

1. REMOVE EXISTING POLE MOUNTED EQUIPMENT AND OTHER COMPONENTS.
2. INTERCEPT EXISTING CONDUIT TO EXISTING BEACON TOWER. EXTEND CIRCUIT WITH NEW CONDUIT AND CONDUCTORS TO NEW VAULT FOR CONTINUATION TO NEW ELECTRICAL BUILDING.
3. INSTALL NEW ELECTRICAL HANDHOLE PER DETAIL 4, SHEET E-6.
4. INSTALL NEW JUNCTION BOX PER XX.
5. CONSTRUCT NEW AIRPORT ELECTRICAL BUILDING PER 2/E-8.

LEGEND:

UGP	NEW UNDERGROUND POWER
UGPx	EXISTING POWER
SSx	EXISTING SANITARY SEWER
SDx	EXISTING STORM SEWER
Tx Tx	EXISTING TELEPHONE
Wx Wx	EXISTING WATERLINE
X X	EXISTING FENCE

CONSTRUCTION NOTES

1. SEE SHEET E-8 FOR PLAN AND ELECTRICAL EQUIPMENT LAYOUT.
2. COLOR OPTIONS FOR PAINT AND ROOFING SHALL BE SUBMITTED TO THE ENGINEER FOR SELECTION PRIOR TO BEGINNING THE BUILDING WORK. COLORS SHALL BE SELECTED BY THE CITY.
3. ALL FRAMING MEMBERS TO BE #2 OR BETTER DOUGLAS FIR.
4. ALL WORK TO MEET UBC CURRENT EDITION.
5. CONTRACTOR TO OBTAIN ALL PERMITS. REQUIRED FOR SUCH BUILDING BY THE CITY OF SEASIDE.
6. CONTRACTOR TO COORDINATE SERVICE CONNECTION AND PAY ALL ASSOCIATED CONNECTION FEES.
7. PAY LIMITS FOR ELECTRICAL BUILDING SHALL INCLUDE THE BUILDING COMPLETE W/ NEW AND RELOCATED ELECTRICAL EQUIPMENT (EXCLUDING REGULATOR) INSTALLED AND APPROVED INCLUDING HAND HOLE ADJACENT TO BUILDING.

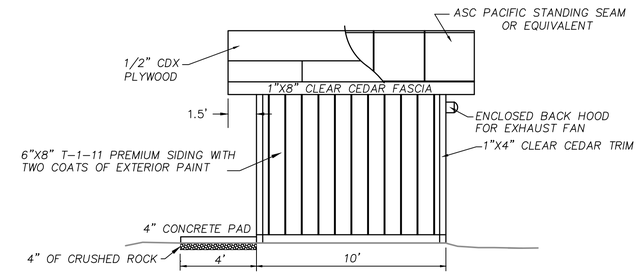

SIDE ELEVATION

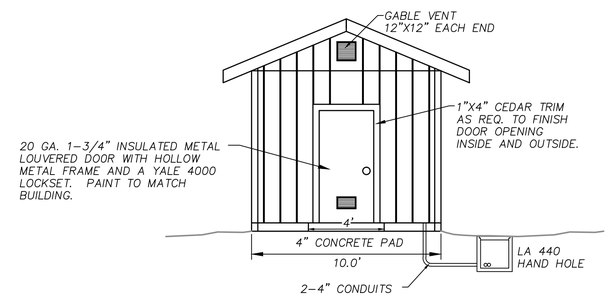

FRONT ELEVATION

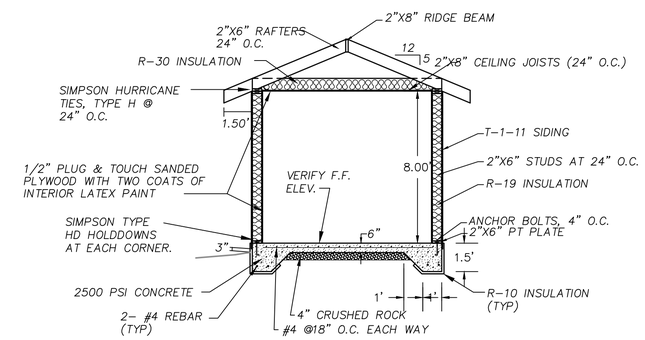

CROSS SECTION

ELECTRICAL BUILDING DETAILS (2 / E-8)
SCALE: N.T.S.

PRELIMINARY

WHPacific
9755 SW Barnes Rd, Suite 300
Portland, OR 97225
503-626-0455 Fax 503-526-0775
www.whpacific.com

REGISTERED PROFESSIONAL ENGINEER — OREGON — DEREK W. JUN 2, 2015 — PRELIMINARY — DATE: 6/18/2015

REVISIONS			
NO.	BY	DATE	REMARKS

SHEET INFO	
DESIGNED	---
DRAWN	---
CHECKED	---
APPROVED	---
LAST EDIT	6/11/2015
PLOT DATE	6/18/2015
SUBMITTAL	

ELECTRICAL BUILDING PLAN

SEASIDE MUNICIPAL AIRPORT
2015 RUNWAY LIGHTING AND OTHER IMPROVEMENTS

SCALE 1"=10'

PROJECT NUMBER 0005537W

DRAWING FILE NAME 0005537W-AIRP-EL03

SHEET NUMBER E-8

[DATE: 6/18/2015 1:53 PM] [AUTHOR: leibert] [PLOTTER: DWG To PDF.pc3] [STYLE: WHP-Standard.ctb]
[PATH: P:\City of Seaside\0005537W\Design\Drawings\Civil\0005537W-AIRP-EL03.dwg] [LAYOUT: E-5 ELECTRICAL BUILDING PLAN]

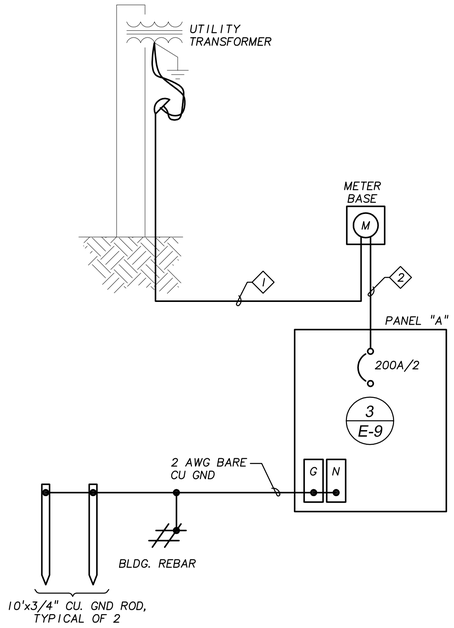

ONE-LINE DIAGRAM (1 / E-9)
SCALE: NONE

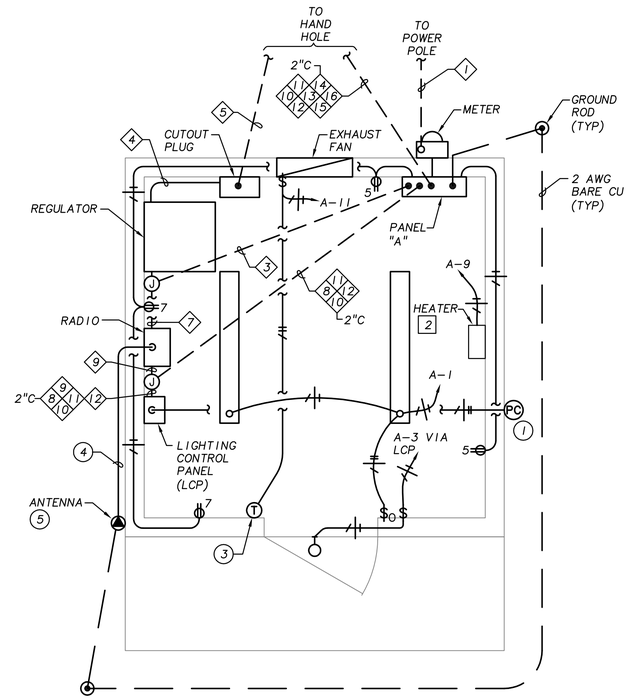

RUNWAY LIGHTING ELECTRICAL BUILDING PLAN (2 / E-9)
SCALE: 1/2"=1-0"

GENERAL NOTES:

1. CONTRACTOR SHALL COORDINATE ALL POWER UTILITY REQUIREMENTS WITH PACIFICORP REPRESENTATIVE. PROJECT COORDINATOR IS MARILYN BROCKEY. E-MAIL: Marilyn.Brockey@pacificorp.com.

KEY NOTES:

1. MOUNT PHOTOCELL W/ELEMENT FACING NORTH.
2. HEATER TO HAVE BUILT-IN T-STAT.
3. LINE-VOLTAGE T-STAT (FOR EXHAUST FAN).
4. RADIO CONTROLLER ANTENNA CABLE.
5. MOUNT NEW RADIO ANTENNA PER MANUFACTURER'S RECOMMENDATION.

PANEL: A — BUS: 200A — VOLTAGE: 120/240V, 1PH, 3 WIRE

FEEDER: SEE POWER RISER — MAIN BRKR: 200A — MOUNTING: SURFACE

CKT NO.	CIRCUIT DESCRIPTION	CKT BREAKER POLES/AMPS	LOAD Type	Volt-Amps	PHASE	LOAD Volt-Amps	LOAD Type	CKT BREAKER POLES/AMPS	CIRCUIT DESCRIPTION	CKT NO.
1	LIGHTS - INTERIOR	1-20		144	A	2200		2-30	CURRENT REGULATOR	2
3	LIGHT - BLDG EXT. (VIA LCP)	1-20		28	B	2200		-	-	4
5	RECEPTS - N/W	1-20		360	A	200		1-20	RADIO & LIGHTING CONTROL PANEL	6
7	RECEPTS - S/E	1-20		360	B			1-20	SPARE	8
9	HEATER	1-20		1000	A	1080		1-20	WIND CONE (VIA LCP)	10
11	EXHAUST FAN	1-20		696	B	1365		1-20	BEACON (VIA LCP)	12
13	GATE SERVICE RECEPT	1-20		180	A	180		1-20	RECEPT AT BEACON TOWER	14
15	GATE CONTROLLER	1-20		360	B	0		1-20	SPARE	16
17	AREA LIGHT (VIA LCP)	1-20		275	A	0		1-20	SPARE	18
19	RECEPT ON POLE	1-20		180	B	0		1-20	SPARE	20
21	SPARE	1-20		0	A	0		1-20	SPARE	22
23	SPARE	1-20		0	B	0		1-20	SPARE	24
25	SPARE	1-20		0	A	0		1-20	SPARE	26
27	SPARE	1-20		0	B	0		1-20	SPARE	28
29	SPARE	1-20		0	A	0		1-20	SPARE	30

	CONNECTED LOAD		TOTAL LOAD		.....NOTES.....
LOAD PER PHASE (VA)	A=	5619	A=	6159	1.
	B=	5189	B=	5729	
					2.
LOAD PER PHASE (AMPS)	A=	46.83	A=	51.33	3.
	B=	43.24	B=	47.75	
					4.
TOTAL LOAD (KVA)		10.81		11.89	5.
SPARE CAPACITY	10.00%	1.08	DATE	09-Jun-15	

PANEL "A" SCHEDULE (3 / E-9)
SCALE: NONE

CONDUIT & CABLE SCHEDULE

CKT. NUMBER	COND. SIZE	CONDUCTORS	FROM	TO
1	3"	PULL CORD PER UTILITY REQUIREMENTS	EXISTING POWER POLE #XXXXXX	METER BASE
2	2"	(3) 3/0 AWG, (1) 4 GND	METER BASE	PANELBOARD "A"
3	2"	(2) 8 AWG & (1) 10 GND	PANELBOARD "A"	4KW REGULATOR
4	2"	(2) 8 AWG, 5KV UNSHIELDED CABLE	4KW REGULATOR	CUTOUT PLUG
5	2"	(2) 8 AWG, 5KV UNSHIELDED CABLE	CUTOUT PLUG	RUNWAY LIGHTING LOOP
6		NOT USED		
7	1"	(4) 12 AWG & (1) 12 GND	RADIO CONTROLLER	4KW REGULATOR
8	2"	(8) 10 AWG & (1) 10 GND	PANELBOARD "A"	LIGHTING CONTROL PANEL
9	1"	(3) 12 AWG & (1) 12 GND	LIGHTING CONTROL PANEL	RADIO CONTROLLER
10	1"	(2) 6 AWG & (1) 6 GND	LIGHTING CONTROL PANEL	EXISTING WINDCONE
11	1"	(2) 10 AWG & (1) 10 GND	LIGHTING CONTROL PANEL	EXISTING BEACON
12	1"	(2) 12 AWG & (1) 12 GND	LIGHTING CONTROL PANEL	EXISTING AREA LIGHT
13	1"	(2) 12 AWG & (1) 12 GND	PANELBOARD "A"	EXISTING RECEPT AT BEACON TOWER
14	1"	(2) 12 AWG & (1) 12 GND	PANELBOARD "A"	EXISTING RECEPT ON AREA LIGHT POLE
15	1"	(2) 12 AWG & (1) 12 GND	PANELBOARD "A"	EXISTING GATE CONTROLLER
16	1"	(2) 12 AWG & (1) 12 GND	PANELBOARD "A"	EXISTING RECEPT AT GATE CONTROLLER
17	1"	NOT USED		
18	1"	NOT USED		

NOTES:
1. CONTRACTOR SHALL COORDINATE ALL POWER UTILITY REQUIREMENTS WITH POWER UTILITY REPRESENTATIVE PRIOR TO CONSTRUCTION.
2. CONTRACTOR SHALL REPLACE ALL EXISTING CIRCUIT CONDUCTORS WITH NEW CONDUCTORS.
3. * INDICATED NUMBER OF CONDUCTORS AND SIZE IS APPROXIMATE. CONTRACTOR SHALL FIELD VERIFY ACTUAL CONDUCTOR COUNT AND SIZES. THE FIELD VERIFIED INFORMATION SHALL BE PROVIDED TO THE ENGINEER IN A WRITTEN DOCUMENT.

WHPacific
RGW ENGINEERING, INC.
9815 S.W. Allen Boulevard
Suite 107
Beaverton, Oregon 97005
Phone: (503) 626-0650
Fax: (503) 726-3326
E-mail: rwengi@rwengi.com
"Engineering Integrated Solutions"
Project No.: 200.028.001
Contact: JEFF HOWARD

REGISTERED PROFESSIONAL ENGINEER 18533 OREGON JEFFREY L. HOWARD
PRELIMINARY NOT TO BE RECORDED
EXPIRES 6/30/15

REVISIONS			
NO.	BY	DATE	REMARKS

SHEET INFO	
DESIGNED	JLH
DRAWN	RSC
CHECKED	JLH
APPROVED	-
LAST EDIT	6/9/2015
PLOT DATE	6/16/2015
SUBMITTAL	

ELECTRICAL ONE-LINE DIAGRAM

SEASIDE MUNICIPAL AIRPORT
2015 RUNWAY LIGHTING AND OTHER IMPROVEMENTS

SCALE: AS SHOWN
PROJECT NUMBER: 0005537W
DRAWING FILE NAME: E-9

SHEET NUMBER
E-9
12 OF ??

W:\WF\200_WHPacific\028_Seaside Airport Improvements\001_Design\DWG\E-9.dwg Jun 16,2015 - 3:57pm ROBERT

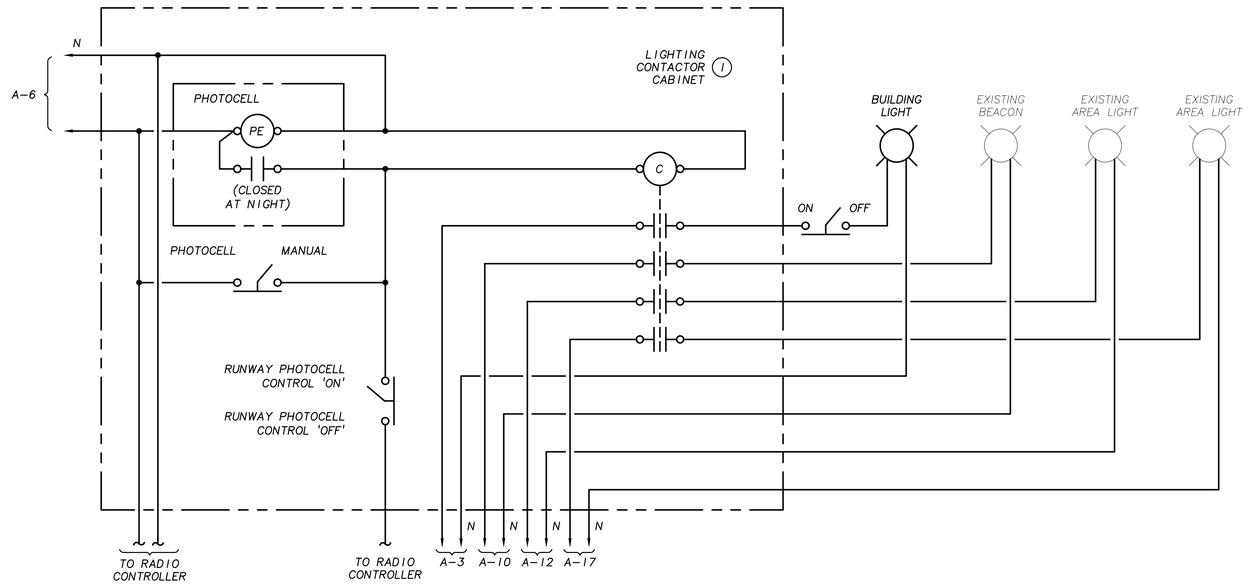

PHOTOCELL CONTROL SCHEMATIC (1 / E-10)

SCALE: NONE

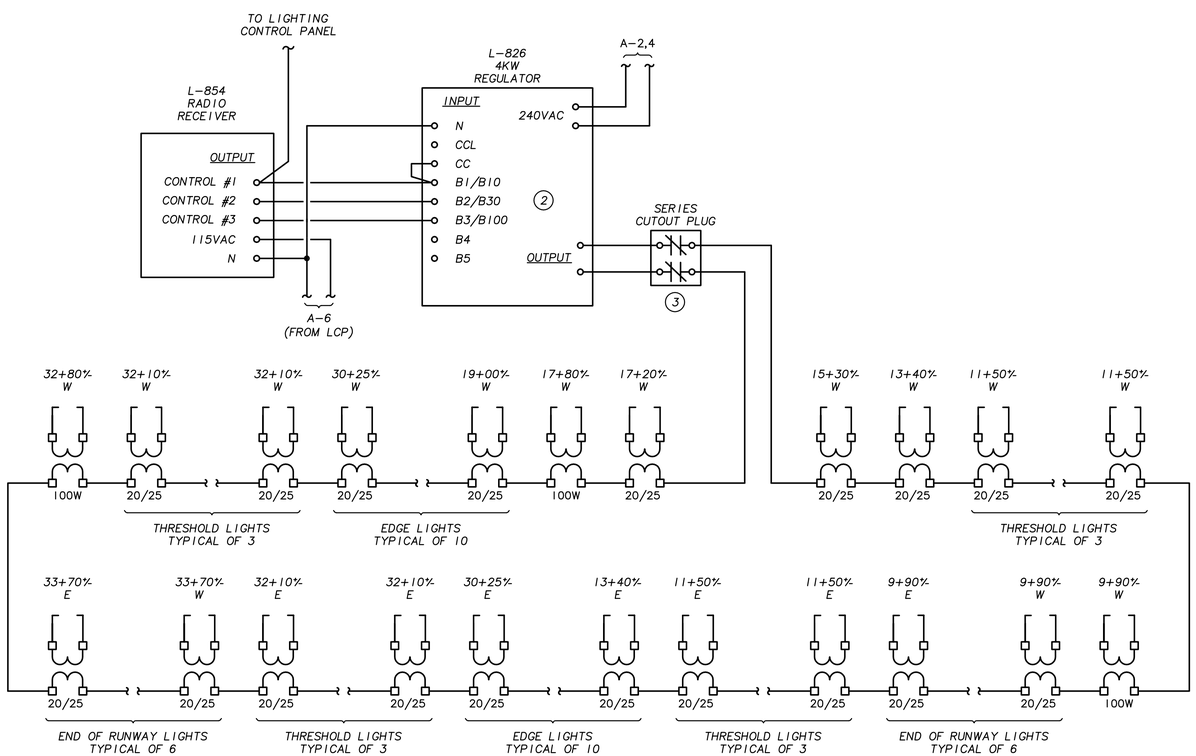

RUNWAY LOOP LIGHTING DIAGRAM (2 / E-10)

SCALE: NONE

GENERAL NOTES:

1. CONTRACTOR SHALL COORDINATE ALL POWER UTILITY REQUIREMENTS WITH PACIFICORP REPRESENTATIVE. PROJECT COORDINATOR IS MARILYN BROCKEY. E-MAIL: Marilyn.Brockey@pacificorp.com.
2. CONTRACTOR SHALL FIELD VERIFY ALL EXISTING EQUIPMENT CONNECTIONS AND CONDUCTOR SIZES PRIOR TO ANY ALTERATIONS OF EXISTING EQUIPMENT.
3. CONTRACTOR SHALL TEST AND VERIFY RUNWAY LIGHTING CURRENT LOOP WITH MEG-METER TO DETERMINE LOOP INTEGRITY. THIS TEST SHALL BE WITNESSED BY THE ENGINEER AND PERFORMED PRIOR TO SUBSTANTIAL COMPLETION.
4. RUNWAY LIGHTS SHALL OPERATE AS FOLLOWS:
   A. RADIO CONTROL SHALL TURN RUNWAY LIGHTS ON/OFF AND ADJUST INTENSITY DURING DAY TIME.
   B. RADIO CONTROL SHALL TURN RUNWAY LIGHTS ON/OFF AND ADJUST INTENSITY DURING NIGHT TIME IF PHOTOCELL CONTROL IS TURNED OFF.
   C. RADIO CONTROL SHALL ADJUST RUNWAY LIGHT INTENSITY DURING NIGHT TIME IF PHOTOCELL CONTROL IS TURNED ON.

KEY NOTES:

1. PROVIDE NEW LIGHTING CONTROL CABINET, NEMA 1 RATED.
2. VERIFY REGULATOR CONTROL WIRING WITH REGULATOR MANUFACTURER PRIOR TO INSTALLATION.
3. TYPE S-1 SERIES CUT OUT PLUG.

LEGEND

- SERIES ISOLATION TRANSFORMER L830 SERIES, 6.6 AMP PRIMARY (NEW OR RELOCATED) – 20/25 WATT, 6.6 AMP SECONDARY – 100 WATT, 6.6 AMP SECONDARY
- L-861SE LED THRESHOLD LIGHTS WITH BASE CAN (NEW OR RELOCATED)
- L-861E LED RUNWAY END LIGHTS WITH BASE CAN (NEW OR RELOCATED)
- L-861 LED RUNWAY EDGE LIGHTS WITH BASE CAN (NEW OR RELOCATED)
- G L-858 LED GUIDANCE SIGN (NEW)
- 120+50% W APPROXIMATE LOCATION: STATION 120 PLUS 50 FEET, WEST SIDE OF RUNWAY.

WHPacific
RW ENGINEERING, INC.
9815 S.W. Allen Boulevard
Suite 107
Beaverton, Oregon 97005
Phone: (503) 626-0650
Fax: (503) 726-3326
E-mail: rweng@rweng.com
"Engineering Integrated Solutions"
Project No.: 200.028.001
Contact: JEFF HOWARD

REGISTERED PROFESSIONAL ENGINEER 18533 OREGON JULY 10, 1998 JEFFREY L. HOWARD

PRELIMINARY

EXPIRES 6/30/15

REVISIONS			
NO.	BY	DATE	REMARKS

SHEET INFO	
DESIGNED	JLH
DRAWN	RSC
CHECKED	JLH
APPROVED	-
LAST EDIT	6/9/2015
PLOT DATE	6/16/2015
SUBMITTAL	

ELECTRICAL ONE-LINE DIAGRAM

SEASIDE MUNICIPAL AIRPORT
2015 RUNWAY LIGHTING AND OTHER IMPROVEMENTS

SCALE: AS SHOWN

PROJECT NUMBER: 0005537W

DRAWING FILE NAME: E-10

SHEET NUMBER: E-10

12 OF ??

W:\WF\200_WHPacific\028_Seaside Airport Improvements\001_Design\DWG\E-10.dwg Jun 16,2015 - 3:58pm ROBERT